REV	DESCRIPTION	DRAWN	DATE
		APPROVED	DATE

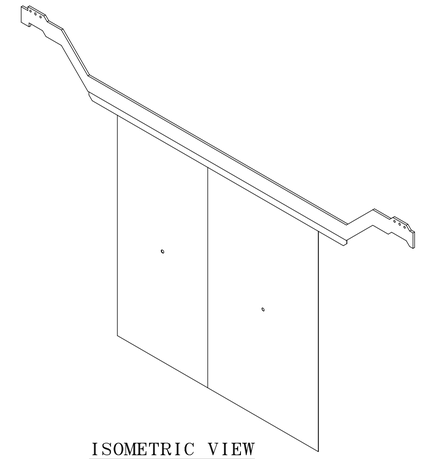

ISOMETRIC VIEW
SCALE : 1:16

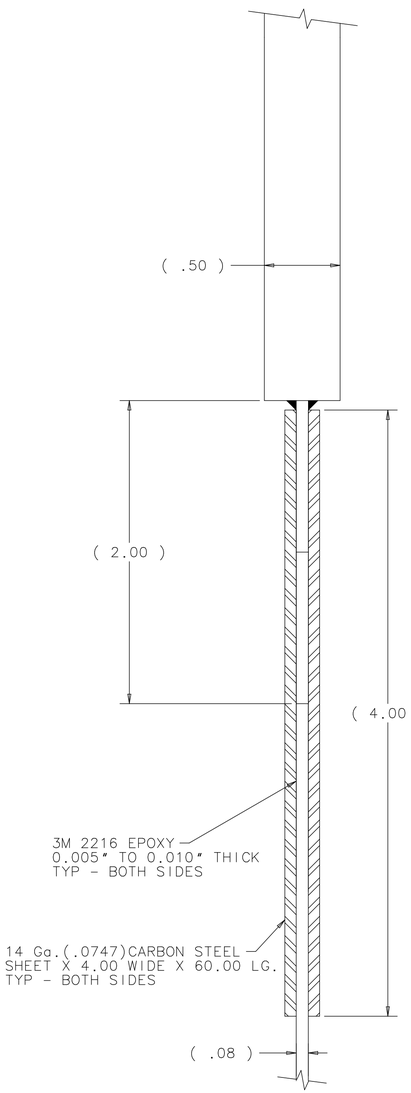

DETAIL VIEW A
SCALE : 2:1

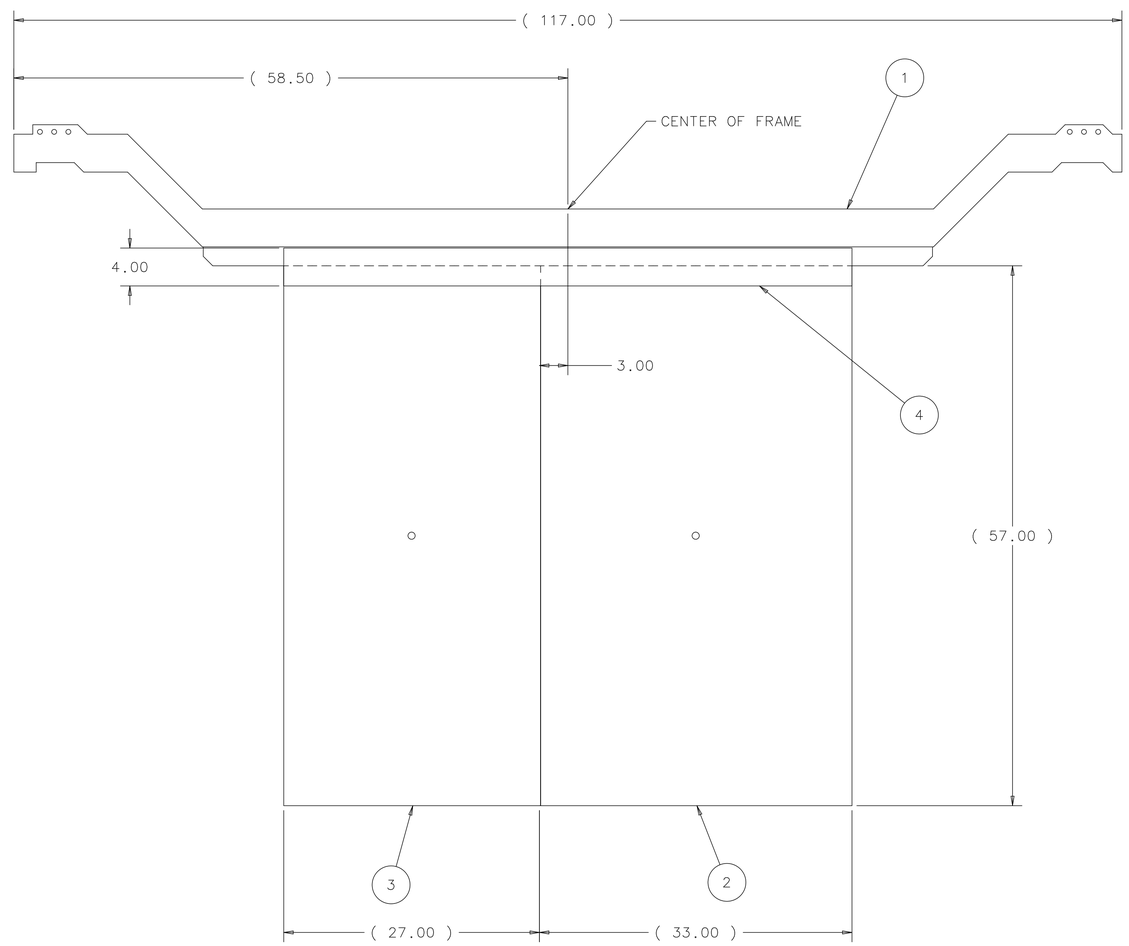

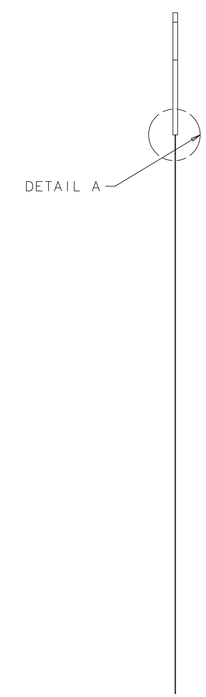

EST. WEIGHT = 193 LBS.

ITEM	PART NO.	DESCRIPTION OR SIZE	QTY.
4	COML	14 Ga. (.0747) CARBON STEEL SHEET-4" WIDE X 60.00 LG.	2
3	MC-466111	LEAD SHEET .080 X 27.00 X 57.00	1
2	MC-466112	LEAD SHEET .080 X 33.00 X 57.00	1
1	MD-466102	HANGER BAR WELDMENT	1

PARTS LIST

UNLESS OTHERWISE SPECIFIED			ORIGINATOR	D.PUSHKA	13-JUN-2008
.XX	.XXX	ANGLES	DRAWN	G.SMITH	13-JUN-2008
± .06	± ---	± ---	CHECKED	J.RAUCH	27-JUN-2008
			APPROVED	D.PUSHKA	27-JUN-2008

1. BREAK ALL SHARP EDGES .015 MAX.
2. DO NOT SCALE DRAWING.
3. DIMENSIONS BASED UPON ASME Y14.5M-1994
4. MAX. ALL MACH. SURFACES 250
5. DRAWING UNITS: U.S. INCH

USED ON

MATERIAL
SEE PARTS LIST ABOVE

FERMI NATIONAL ACCELERATOR LABORATORY
UNITED STATES DEPARTMENT OF ENERGY

MINERVA - GENERAL
A DETECTOR STAND ASSEMBLY
LEAD SHEET ASSEMBLY-LEFT #1

SCALE	DRAWING NUMBER	SHEET	REV
1:8 & AS NOTED	3938.000-MD-466107	1 OF 1	

CREATED WITH : Ideas12NXSeries | GROUP: PPD/MECHANICAL DEPARTMENT

Created: 08:10:54 on 27-06-08 (D-M-Y) By: gsmith State: 1-INITIAL